REVISIONS				
REV. SYM.	E.C.O. NUMBER	DESCRIPTION	BY DATE	APP'D DATE
1		ORIGINAL RELEASE	E.D. 1-18-99	DE 1-98

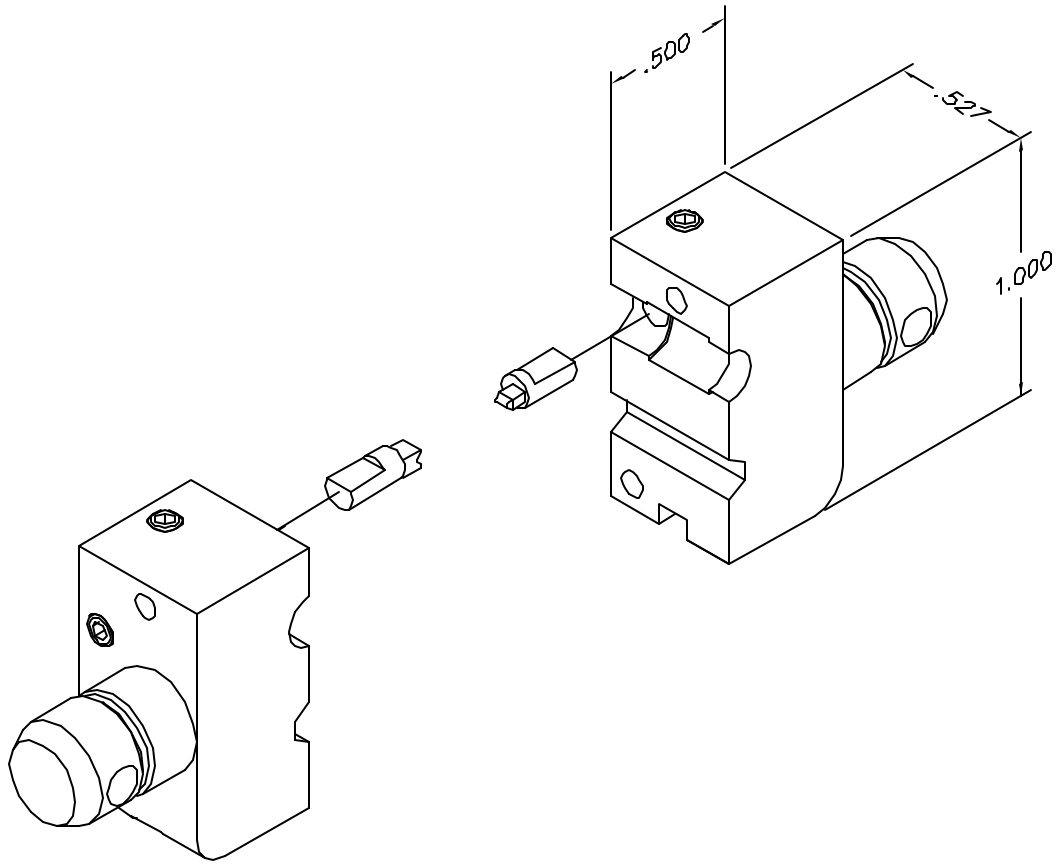

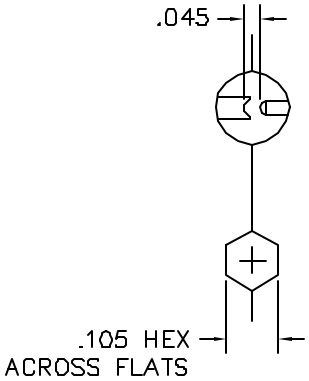

GAGING

UNCONTROLLED DOCUMENT WILL NOT BE UPDATED

1. REF. POSITRONICS CONNECTORS FCC4101D.

NOTES:

RESTRICTED & CONFIDENTIAL

CONFIDENTIAL PROPERTY OF DANIELS MANUFACTURING CORP. NOT TO BE DISCLOSED TO OTHERS, REPRODUCED OR USED FOR ANY OTHER PURPOSE, EXCEPT AS AUTHORIZED IN WRITING BY DANIELS MANUFACTURING. MUST BE RETURNED TO DANIELS MANUFACTURING CORP. ON COMPLETION OF ORDER OR OTHER PURPOSE FOR WHICH LENT.

DO NOT SCALE DRAWING

MATERIAL

HEAT TREAT

FINISH

ITEM	PART NO.	QTY.	DESCRIPTION/REMARKS

DRN.	E. DIAZ	DATE	1-18-99
CHK'D.	DE	DATE	1-98
APP'D.		DATE	
APP'D.		DATE	

NOTE:
THIS DRAWING IS AN OUTLINE DRAWING OF THE RESPECTIVE DMC PART NUMBER INDICATED. ACTUAL DMC PART NUMBER IS DRAWING NUMBER WITHOUT THE "-ENV" SUFFIX.

DMC DANIELS MANUFACTURING CORP.
ORLANDO, FLORIDA
CAGE 11851

TITLE
DIE SET
ENVELOPE DRAWING

WHERE USED:

SIZE	SCALE	CAD P/N	SHEET	OF
B	NTS	Y878-ENV	1	1

POSTING	DWG. NO.	REV.
	Y878-ENV	1