REVISIONS				
REV. SYM.	E.C.O. NUMBER	DESCRIPTION	BY DATE	APP'D DATE
1		ORIGINAL RELEASE	ED 8-14-96	AAM 8-14-96
2		CORRECTED P/N ON DATAPLATE	TD 2/4/04	JWJ 2/2/04
3	21746	DATAPLATE CHANGE	TD 5-13-10	
4	21824	DATAPLATE CHANGE	TD 7-26-10	

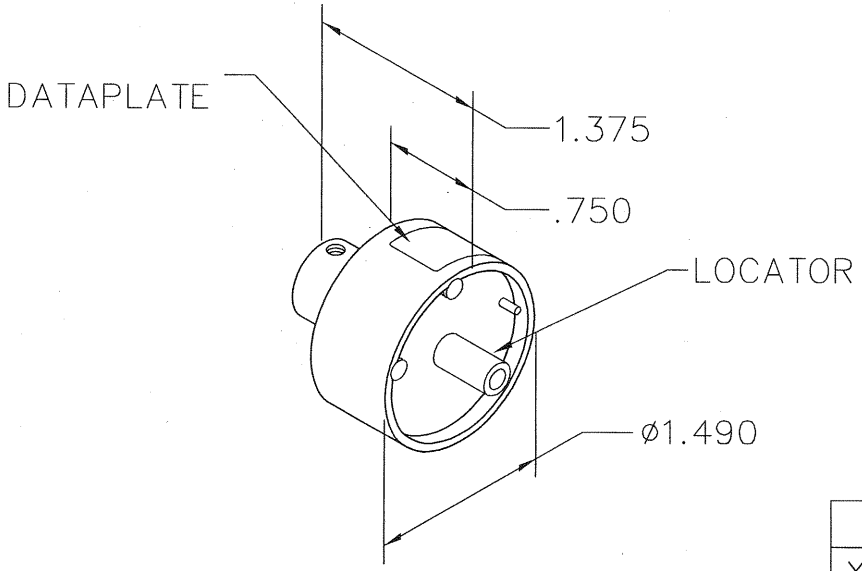

UNCONTROLLED DOCUMENT WILL NOT BE UPDATED

DIMENSIONS IN INCHES - UNLESS OTHERWISE SPECIFIED

HYPERTRONICS	22	20	18	14	16	12	WIRE SIZE
YPN025-002, YSK025-003	3	4	5		3		SELECTOR NUMBER
YPN025-003, YSK025-004				5	3		
YSK025-013						5	
USE WITH M309							

DATAPLATE

LOCATOR	
HOLE DIMENSIONS	ADDITIONAL FEATURES
ø.104 ↧1.14 MIN.	⌴ ø.248 ↧.534

RESTRICTED & CONFIDENTIAL

CONFIDENTIAL PROPERTY OF DANIELS MANUFACTURING CORP. NOT TO BE DISCLOSED TO OTHERS, REPRODUCED OR USED FOR ANY OTHER PURPOSE, EXCEPT AS AUTHORIZED IN WRITING BY DANIELS MANUFACTURING. MUST BE RETURNED TO DANIELS MANUFACTURING CORP. ON COMPLETION OF ORDER OR OTHER PURPOSE FOR WHICH LENT.

DO NOT SCALE DRAWING

DRN.	E. DIAZ	DATE	8-14-96
CHK'D.	AAM	DATE	8-14-96
APP'D.		DATE	
APP'D.		DATE	

NOTE:
THIS DRAWING IS AN OUTLINE DRAWING OF THE RESPECTIVE DMC PART NUMBER INDICATED. ACTUAL DMC PART NUMBER IS DRAWING NUMBER WITHOUT THE "-ENV" SUFFIX.

DMC
DANIELS MANUFACTURING CORP.
ORLANDO, FLORIDA
CAGE 11851

TITLE
ENVELOPE DRAWING
SINGLE POSITION HEAD

WHERE USED: M309

SIZE	SCALE	CAD P/N	SHEET	OF
A	NTS	TP1179-ENV	1	1
POSTING		DWG. NO. TP1179-ENV	REV. 4	