REVISIONS				
REV. STN.	E.C.O. NUMBER	DESCRIPTION	BY DATE	APP'D DATE
1		ORIGINAL RELEASE	AAM 1-16-03	RRR 1-06-03

UNCONTROLLED DOCUMENT WILL NOT BE UPDATED

SIEMENS INDUSTRIAL AUTOMATION	COLOR CODE	CRIMP PROCESS
6FX2003-4AB00	BLUE	CONDUCTOR
	BLACK	INSULATION
USE WITH M300BT		

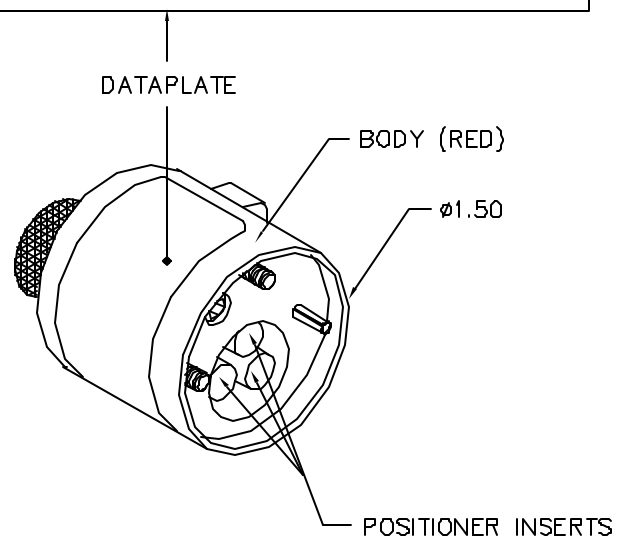

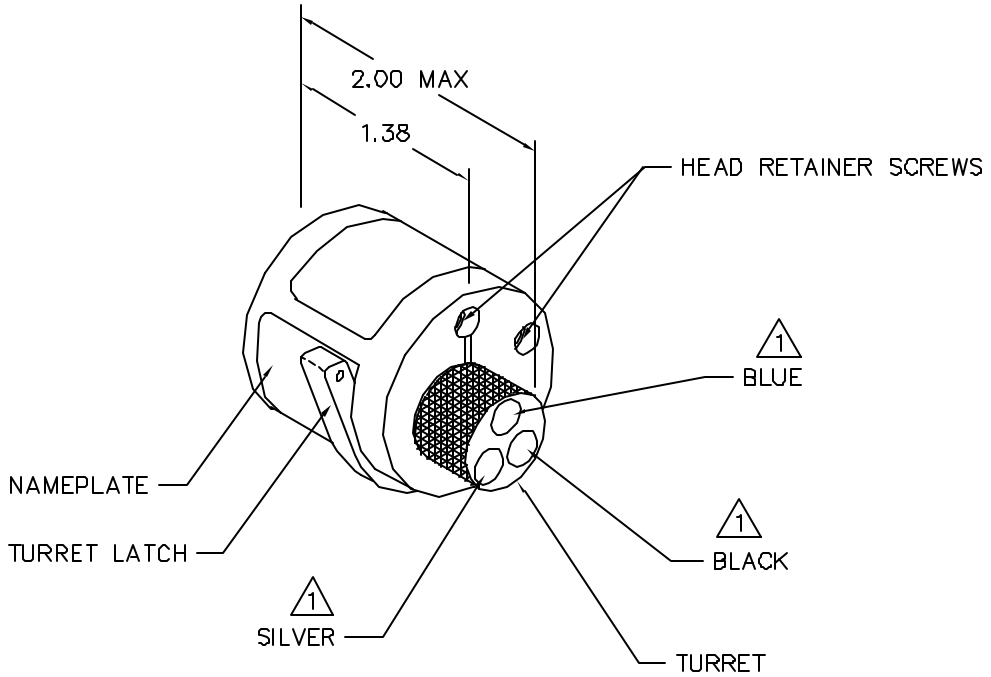

1 RANDOM ORDER OF ROTATION IS ACCEPTABLE.

POSITIONER COLOR	HOLE DIMENSIONS	ADDITIONAL FEATURES
BLACK	ø.084 ↧ .78 MIN.	
BLUE	ø.084 ↧ .27 MIN.	

* HOLE AND COUNTERBORE DEPTHS ARE MEASURED FROM TOP OF POSITIONER INSERTS.

RESTRICTED & CONFIDENTIAL

CONFIDENTIAL PROPERTY OF DANIELS MANUFACTURING CORP. NOT TO BE DISCLOSED TO OTHERS, REPRODUCED OR USED FOR ANY OTHER PURPOSE, EXCEPT AS AUTHORIZED IN WRITING BY DANIELS MANUFACTURING. MUST BE RETURNED TO DANIELS MANUFACTURING CORP. ON COMPLETION OF ORDER OR OTHER PURPOSE FOR WHICH LENT.

DO NOT SCALE DRAWING

ITEM	PART NO.	QTY.	DESCRIPTION/REMARKS

DRN. A. MOO-YOUNG	DATE 1-16-03	DANIELS MANUFACTURING CORP. ORLANDO, FLORIDA CAGE 11851
CHK'D. RRR	DATE 1-16-03	
APP'D.	DATE	TITLE ENVELOPE DRAWING TURRET HEAD
APP'D.	DATE	WHERE USED: M300BT

SIZE	SCALE	CAD P/N	SHEET OF
B	NTS	TH640-ENV	1 1
POSTING		DWG NO. TH640-ENV	REV. 1