REVISIONS				
REV. STN.	E.C.O. NUMBER	DESCRIPTION	BY DATE	APP'D DATE
1		ORIGINAL RELEASE	JWS 11-12-90	DD 11-12-90

UNCONTROLLED DOCUMENT WILL NOT BE UPDATED

AMPHENOL 21-33197-10 21-33198-10 INTERMEDIATE CONTACT	COLOR CODE	PROCEDURE
	RED	1ST CRIMP
	BLUE	2ND CRIMP

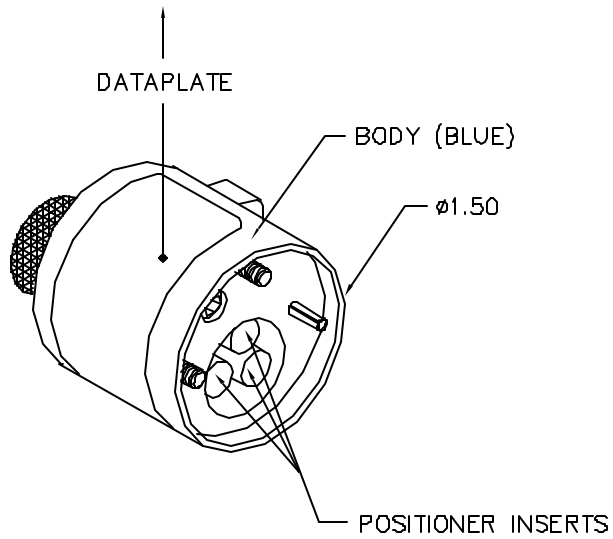

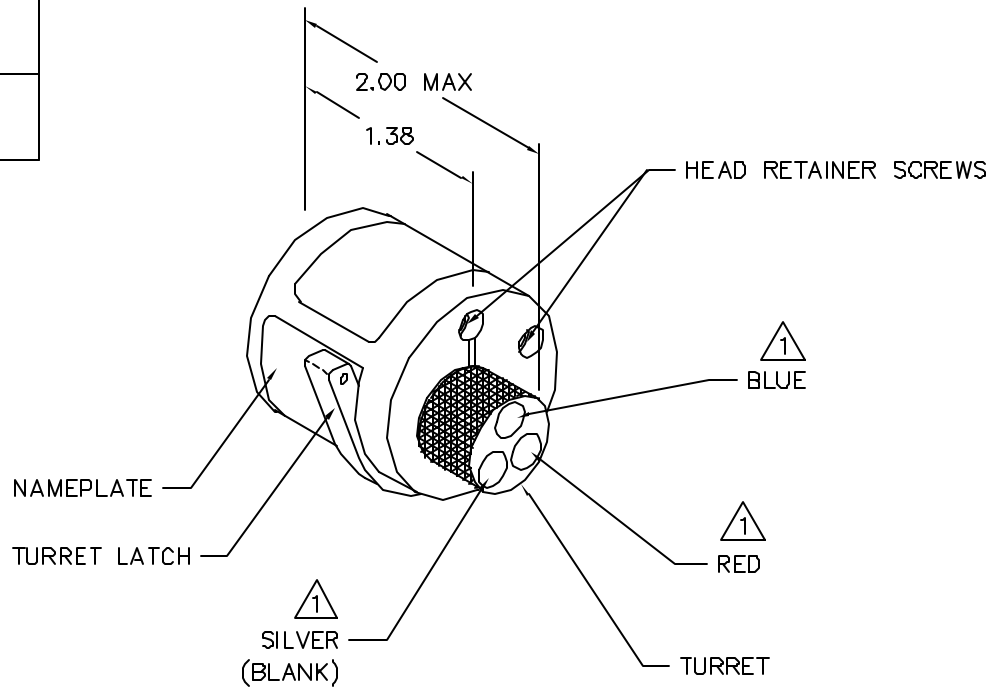

1 RANDOM ORDER OF ROTATION IS ACCEPTABLE.

POSITIONER COLOR	HOLE DIMENSIONS	ADDITIONAL FEATURES
RED	ø.144 ↧.84 MIN.	⌴ ø.169 ↧ .011
BLUE	ø.116 ↧.84 MIN.	⌴ ø.144 ↧ .386 / ⌴ ø.185 ↧ .17

* HOLE AND COUNTERBORE DEPTHS ARE MEASURED FROM TOP OF POSITIONER INSERTS.

RESTRICTED & CONFIDENTIAL

CONFIDENTIAL PROPERTY OF DANIELS MANUFACTURING CORP. NOT TO BE DISCLOSED TO OTHERS, REPRODUCED OR USED FOR ANY OTHER PURPOSE, EXCEPT AS AUTHORIZED IN WRITING BY DANIELS MANUFACTURING. MUST BE RETURNED TO DANIELS MANUFACTURING CORP. ON COMPLETION OF ORDER OR OTHER PURPOSE FOR WHICH LENT.

DO NOT SCALE DRAWING

ITEM	PART NO.	QTY.	DESCRIPTION/REMARKS

DRN. JS	DATE 11-12-90	DANIELS MANUFACTURING CORP. ORLANDO, FLORIDA CAGE 11851
CHK'D. PD	DATE 11-12-90	
APP'D. AAM	DATE 11-12-90	TITLE ENVELOPE DRAWING TURRET HEAD
APP'D.	DATE	

NOTE: THIS DRAWING IS AN OUTLINE DRAWING OF THE RESPECTIVE DMC PART NUMBER INDICATED. ACTUAL DMC PART NUMBER IS DRAWING NUMBER WITHOUT THE "-ENV" SUFFIX.

WHERE USED: 08208

SIZE	SCALE	CAD P/N	SHEET
B	NTS	TH551-ENV	1 OF 1

POSTING | DWG. NO. TH551-ENV | REV. 1