REVISIONS				
REV. SYM.	E.C.O. NUMBER	DESCRIPTION	BY DATE	APP'D DATE
1		ORIGINAL RELEASE	MGS 9/13/85	RRR 9/17/85

UNCONTROLLED DOCUMENT WILL NOT BE UPDATED

DEUTSCH CONTACTS	COLOR CODE	26	24	22	20	18	16	WIRE SIZE
800-20/32-1 800-20/30-1	RED	2	2	3	4			SELECTOR NO.
800-16/32-1 200-16/30-1	BLUE				4	5	6	
0641-10-2056 0603-13-2056	GREEN	1	2	3	4			

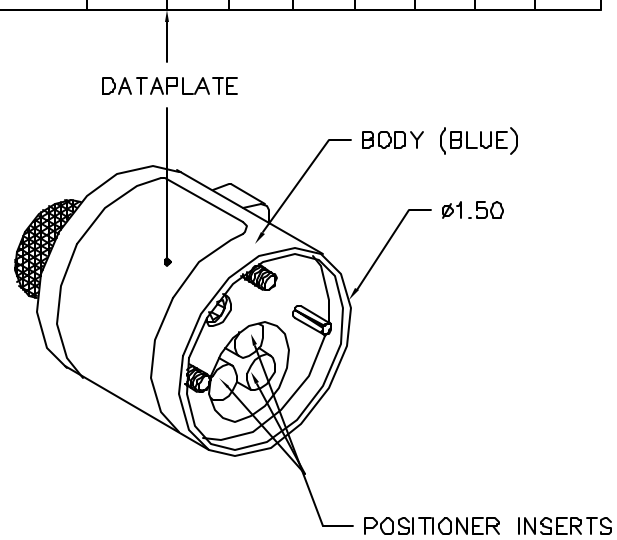

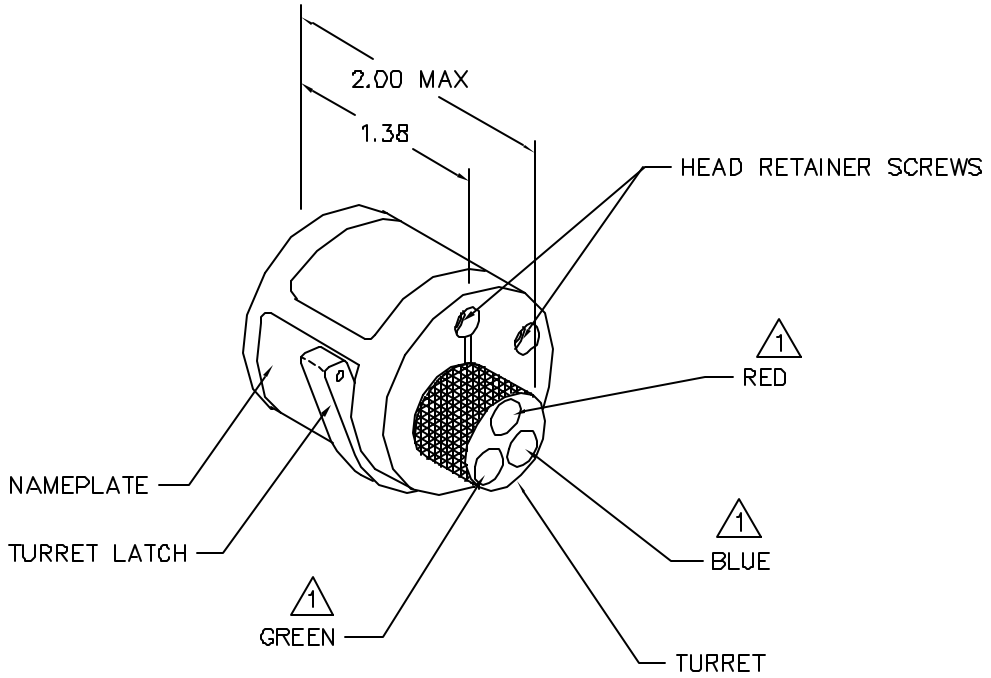

1 RANDOM ORDER OF ROTATION IS ACCEPTABLE.

POSITIONER COLOR	HOLE DIMENSIONS	ADDITIONAL FEATURES
GREEN	ø.085 ↧.84 MIN.	
BLUE	ø.130 ↧.84 MIN.	⌴ ø.156 ↧.154
RED	ø.098 ↧.84 MIN.	⌴ ø.125 ↧.140

HOLE AND COUNTERBORE DEPTHS ARE MEASURED FROM TOP OF POSITIONER INSERTS.

RESTRICTED & CONFIDENTIAL

CONFIDENTIAL PROPERTY OF DANIELS MANUFACTURING CORP. NOT TO BE DISCLOSED TO OTHERS, REPRODUCED OR USED FOR ANY OTHER PURPOSE, EXCEPT AS AUTHORIZED IN WRITING BY DANIELS MANUFACTURING. MUST BE RETURNED TO DANIELS MANUFACTURING CORP. ON COMPLETION OF ORDER OR OTHER PURPOSE FOR WHICH LENT.

DO NOT SCALE DRAWING

ITEM	PART NO.	QTY.	DESCRIPTION/REMARKS

DRN. MGS	DATE 8/13/85	DANIELS MANUFACTURING CORP. ORLANDO, FLORIDA CAGE 17851
CHK'D. TR	DATE 8/16/85	TITLE TURRET HEAD ENVELOPE DRAWING
APP'D. RRR	DATE 8/17/85	
APP'D.	DATE	WHERE USED: AF8

NOTE: THIS DRAWING IS AN OUTLINE DRAWING OF THE RESPECTIVE DMC PART NUMBER INDICATED. ACTUAL DMC PART NUMBER IS DRAWING NUMBER WITHOUT THE "-ENV" SUFFIX.

SIZE	SCALE	CAD P/N	SHEET OF
B	NTS	TH244-ENV	1 1
POSTING		DWG. NO. TH244-ENV	REV. 1