REVISIONS				
REV. SYM.	E.C.O. NUMBER	DESCRIPTION	BY DATE	APP'D DATE
1		ORIGINAL RELEASE	LLW 3-2-87	DLC 3-2-87

UNCONTROLLED DOCUMENT WILL NOT BE UPDATED

CONTACT		COLOR CODE	30 SOL.	28	26	24	22	20	18	16	WIRE SIZE
BENDIX JTR-20		RED				1	2	3			SEL. NO.
BURNDY	RC/RM24M-9	"RC" SERIES GREEN "RM" SERIES BLUE			2	3					
BURNDY	RC/RM20M-12						3	4			
BURNDY	RC/RM20M-13										
BURNDY	RC/RM16M-23							4	5	5	
BURNDY	RC/RM28M-1		1	1							

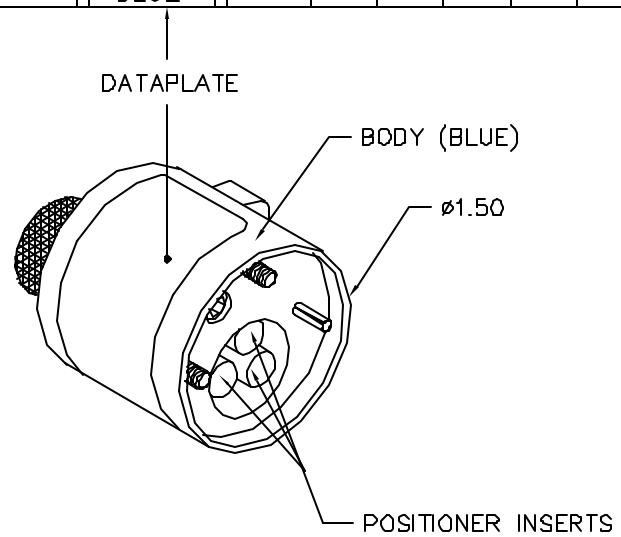

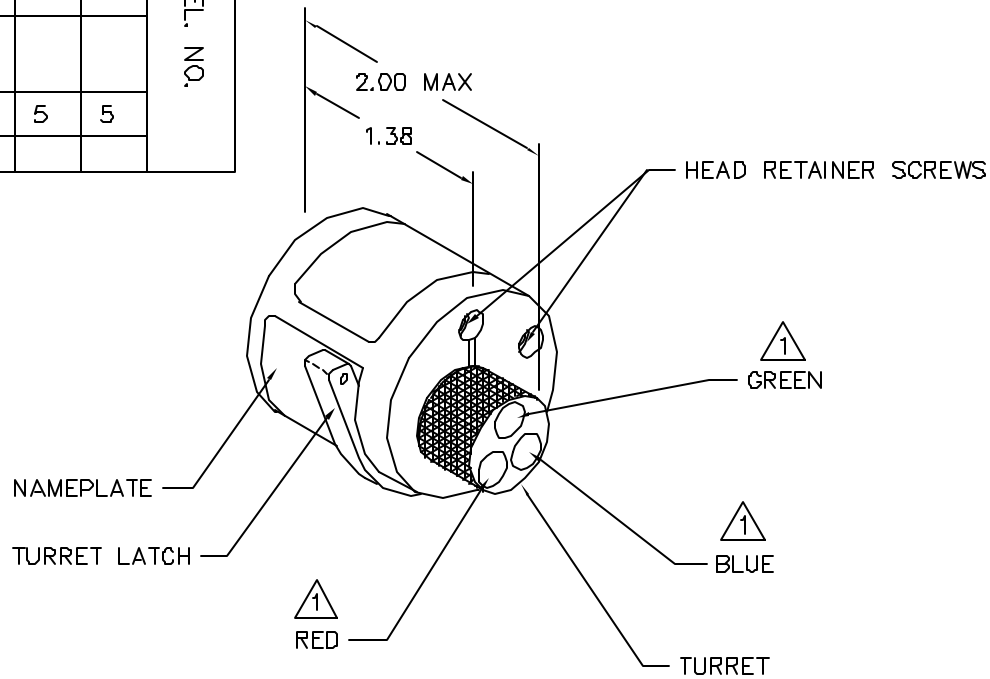

1 RANDOM ORDER OF ROTATION IS ACCEPTABLE.

POSITIONER COLOR	HOLE DIMENSIONS	ADDITIONAL FEATURES
RED	ø.082 ↧.84 MIN.	⌴ ø.096 ↧.050
BLUE	ø.078 ↧.84 MIN.	⌴ ø.136 ↧.305
GREEN	ø.136 ↧.415	

HOLE AND COUNTERBORE DEPTHS ARE MEASURED FROM TOP OF POSITIONER INSERTS.

RESTRICTED & CONFIDENTIAL

CONFIDENTIAL PROPERTY OF DANIELS MANUFACTURING CORP. NOT TO BE DISCLOSED TO OTHERS, REPRODUCED OR USED FOR ANY OTHER PURPOSE, EXCEPT AS AUTHORIZED IN WRITING BY DANIELS MANUFACTURING. MUST BE RETURNED TO DANIELS MANUFACTURING CORP. ON COMPLETION OF ORDER OR OTHER PURPOSE FOR WHICH LENT.

DO NOT SCALE DRAWING

ITEM	PART NO.	QTY.	DESCRIPTION/REMARKS

DRN. J. JOYCE DATE 3/24/03
CHK'D. RRR DATE 3/24/03
APP'D. DATE
APP'D. DATE

NOTE: THIS DRAWING IS AN OUTLINE DRAWING OF THE RESPECTIVE DMC PART NUMBER INDICATED. ACTUAL DMC PART NUMBER IS DRAWING NUMBER WITHOUT THE "-ENV" SUFFIX.

DANIELS MANUFACTURING CORP.
ORLANDO, FLORIDA
CAGE 17851

TITLE
ENVELOPE DRAWING
TURRET HEAD

WHERE USED: AFG

SIZE B | SCALE NTS | CAD P/N TH206-ENV | SHEET 1 OF 1

POSTING | DWG. NO. TH206-ENV | REV. 1