REVISIONS				
REV. SYM.	E.C.O. NUMBER	DESCRIPTION	BY DATE	APP'D DATE
1		ORIGINAL RELEASE	JWJ 11/12/02	RRR 11/12/01

SECTION A-A

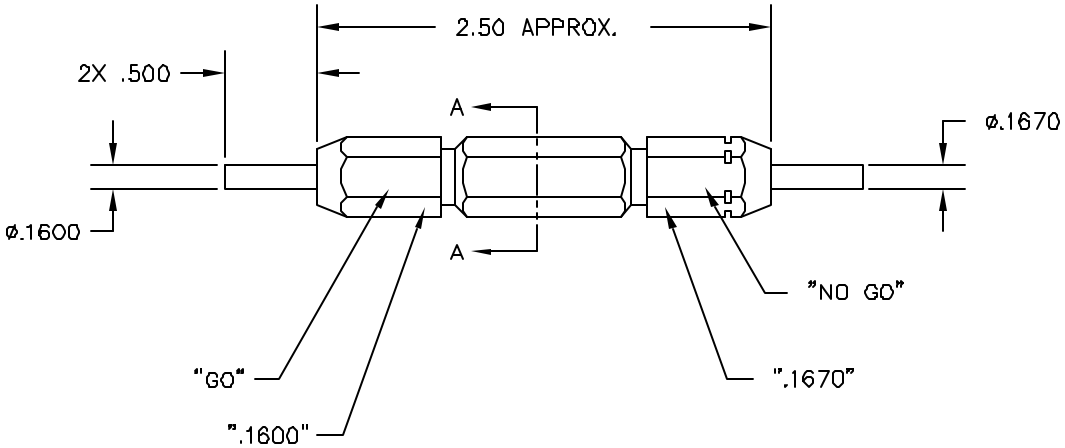

UNCONTROLLED DOCUMENT WILL NOT BE UPDATED

RESTRICTED & CONFIDENTIAL

CONFIDENTIAL PROPERTY OF DANIELS MANUFACTURING CORP. NOT TO BE DISCLOSED TO OTHERS, REPRODUCED OR USED FOR ANY OTHER PURPOSE, EXCEPT AS AUTHORIZED IN WRITING BY DANIELS MANUFACTURING. MUST BE RETURNED TO DANIELS MANUFACTURING CORP. ON COMPLETION OF ORDER OR OTHER PURPOSE FOR WHICH LENT.

DO NOT SCALE DRAWING

MATERIAL

HEAT TREAT

FINISH

ITEM	PART NO.	QTY.	DESCRIPTION/REMARKS

DRN. J. JOYCE DATE 11/12/02

CHK'D. RRR DATE 11/12/02

APP'D. DATE

APP'D. DATE

DMC DANIELS MANUFACTURING CORP. ORLANDO, FLORIDA CAGE 11851

TITLE GO/NO-GO GAGE ENVELOPE DRAWING

WHERE USED:

SIZE B | SCALE NTS | CAD P/N G813-ENV | SHEET 1 OF 1

POSTING | P/N GB13-ENV | REV. 1