REVISIONS				
REV. SYM.	E.C.O. NUMBER	DESCRIPTION	BY DATE	APP'D DATE
2		UPDATED TO MATCH MFG. DWG.	ED 3/28/98	DE 3/98

SECTION A-A

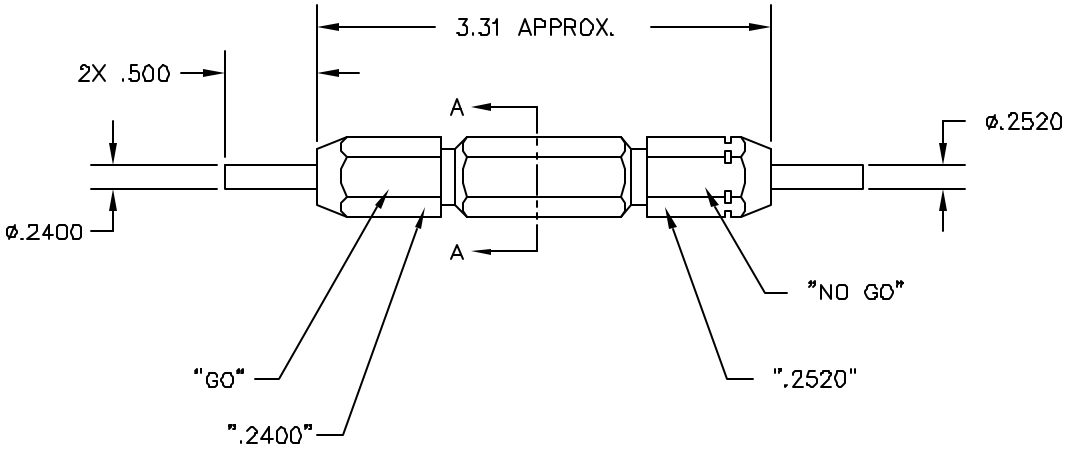

UNCONTROLLED DOCUMENT
WILL NOT BE UPDATED

RESTRICTED & CONFIDENTIAL

CONFIDENTIAL PROPERTY OF DANIELS MANUFACTURING CORP. NOT TO BE DISCLOSED TO OTHERS, REPRODUCED OR USED FOR ANY OTHER PURPOSE, EXCEPT AS AUTHORIZED IN WRITING BY DANIELS MANUFACTURING. MUST BE RETURNED TO DANIELS MANUFACTURING CORP. ON COMPLETION OF ORDER OR OTHER PURPOSE FOR WHICH LENT.

DO NOT SCALE DRAWING

MATERIAL

HEAT TREAT

FINISH

ITEM	PART NO.	QTY.	DESCRIPTION/REMARKS

DRN. ED DATE 3/26/98
CHK'D. DE DATE 3/98
APP'D. DATE
APP'D. DATE

DMC DANIELS MANUFACTURING CORP. ORLANDO, FLORIDA CAGE 11851

TITLE: GO/NO-GO GAGE ENVELOPE DRAWING

WHERE USED:

SIZE	SCALE	CAD P/N	SHEET 1 OF 1
B	NTS	G433-ENV	

POSTING | P/N G433-ENV | REV. 2