REVISIONS				
REV. SYM.	E.C.O. NUMBER	DESCRIPTION	BY DATE	APP'D DATE
1		ORIGINAL RELEASE	ENF 7-1-10	RRR 7-1-10

UNCONTROLLED DOCUMENT WILL NOT BE UPDATED

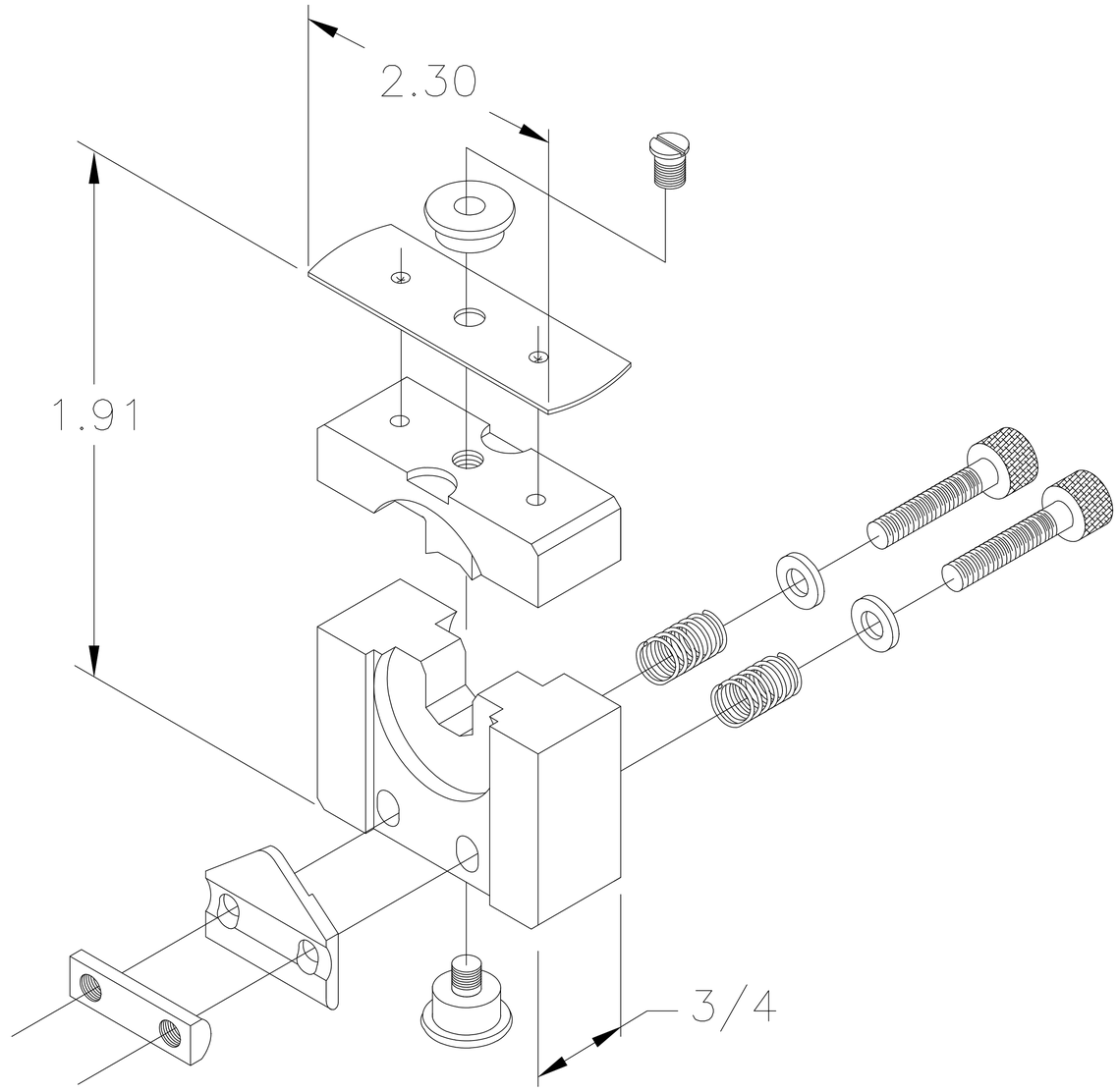

NOTES:

1. DIE SET FOR USE WITH MS25036 SIZE 2 IN TOOL HEAD TBHD1M.
2. GAGING DIMENDSION: .312; CHECK WITH GAGE G281 (MS23003-2).

RESTRICTED & CONFIDENTIAL

CONFIDENTIAL PROPERTY OF DANIELS MANUFACTURING CORP. NOT TO BE DISCLOSED TO OTHERS, REPRODUCED OR USED FOR ANY OTHER PURPOSE, EXCEPT AS AUTHORIZED IN WRITING BY DANIELS MANUFACTURING. MUST BE RETURNED TO DANIELS MANUFACTURING CORP. ON COMPLETION OF ORDER OR OTHER PURPOSE FOR WHICH LENT.

DO NOT SCALE DRAWING

MATERIAL

HEAT TREAT

FINISH

ITEM	PART NO.	QTY.	DESCRIPTION/REMARKS

DRN. ENF	DATE 7-1-10	DANIELS MANUFACTURING CORP. ORLANDO, FLORIDA CAGE 11851	
CHK'D. RR	DATE 7-1-10		
APP'D.	DATE	TITLE DIE SET ENVELOPE DRAWING (MS23002-2)	
APP'D.	DATE	WHERE USED:	

NOTE: THIS DRAWING IS AN OUTLINE DRAWING OF THE RESPECTIVE DMC PART NUMBER INDICATED. ACTUAL DMC PART NUMBER IS DRAWING NUMBER WITHOUT THE "-ENV" SUFFIX.

SIZE	SCALE	CAD P/N	SHEET OF
B	NTS	HD002-2-ENV	1 1
POSTING		DWG. NO. HD002-2-ENV	REV. 1